SPS fibre FORM Modular Building Standards …..

PANEL CROSS SECTION

X	Y	X	Y
2"	1"	3"	1-3/4"

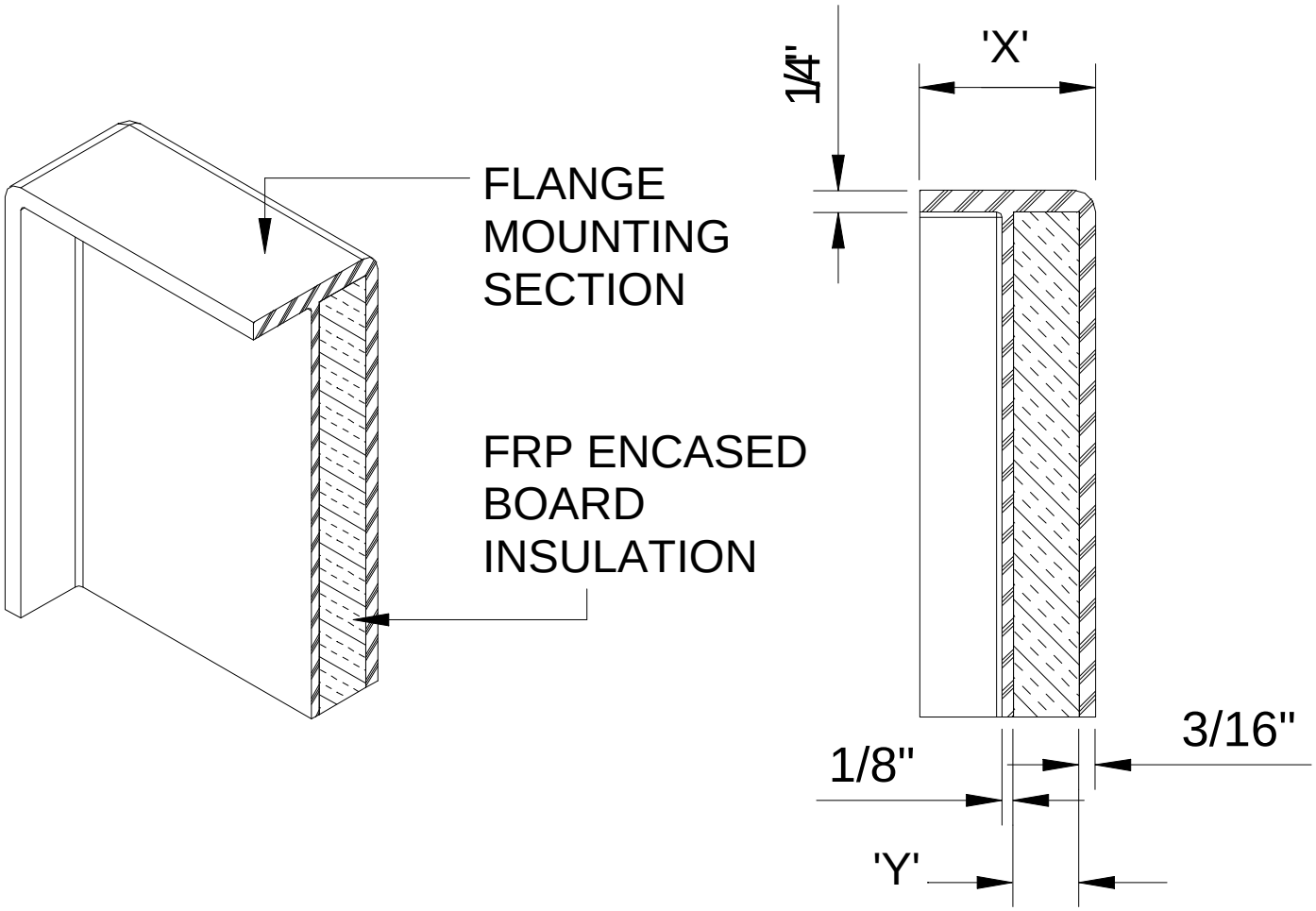

SPS *fibre* FORM MANUFACTURING & DESIGN INC.
255 HENRY DRIVE CHIPPEWA INDUSTRIAL PARK
SARNIA, ONTARIO N7T 7H5
TEL (519) 337-2773 FAX (519) 337-1522
email: spsinfo@spsff.com internet site - http://www.spsff.com